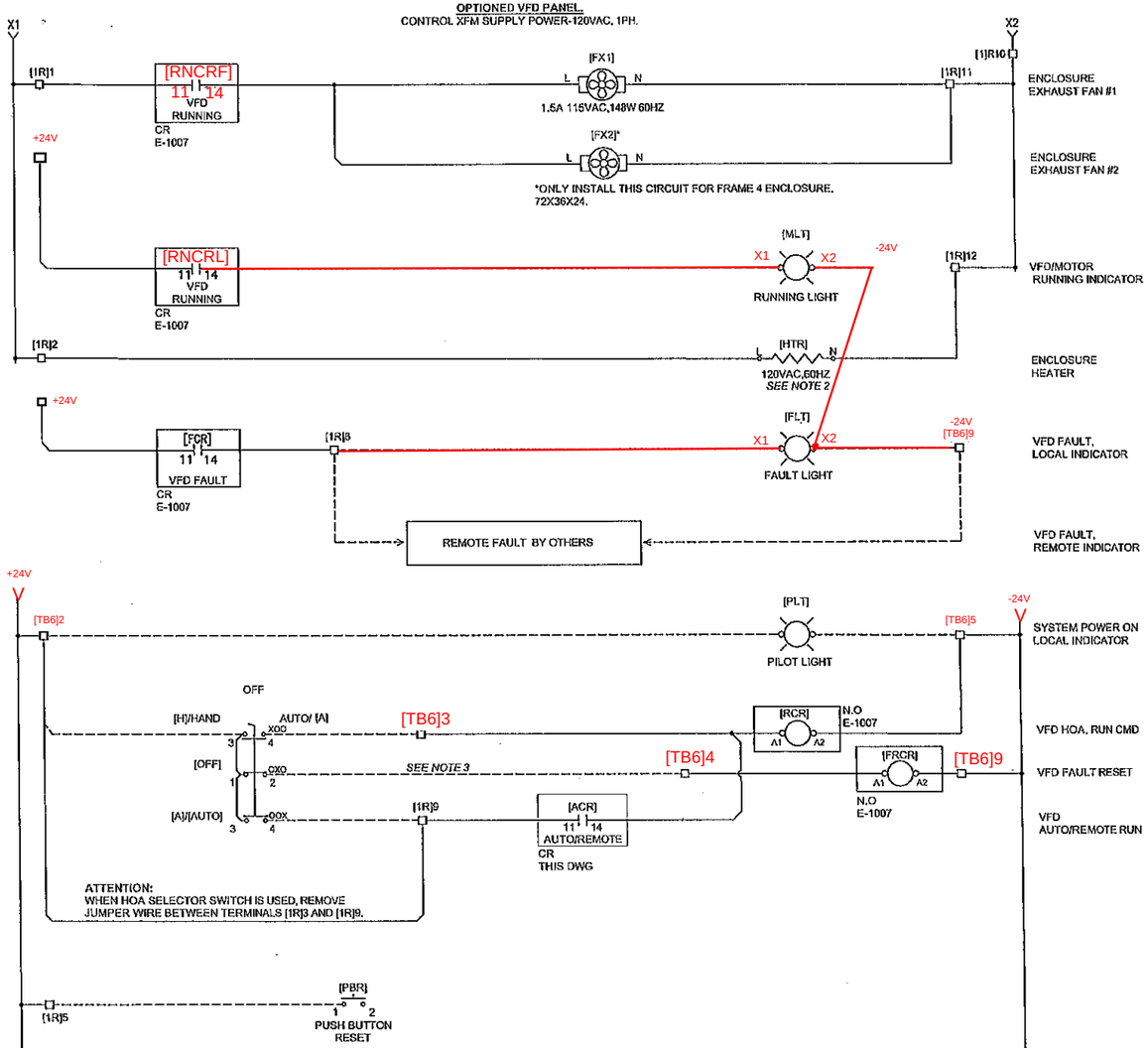

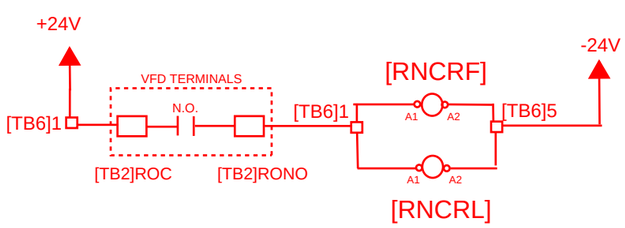

24VDC OR 120VAC REMOTE CTL RELAY

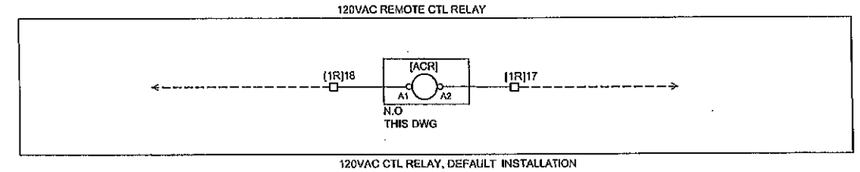

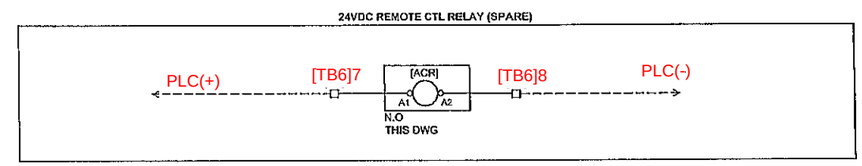

24VDC SPARE RELAY, FIELD INSTALLATION WHEN REQUIRED.
SEE PANEL POCKET FOR 24VDC CONTROL RELAY. TO INSTALL, REMOVE (120VAC ACR CR) AND INSTALL THIS 24VDC CONTROL RELAY.

OPTIONS

------ *SEE COVER SHEET PART NUMBER FOR INSTALLATION OPTION.*

------ UNLESS FACTORY INSTALLED, OPTION CONNECTION BY OTHERS.

CONSTRUCTION NOTES.

1. ONLY CONNECT SHIELD WIRES VIA TERMINALS [1R].
2. VERIFY PANEL DESIGN REQUIREMENT.
   - 200W OPTION HEATER FOR ENCLOSURE PANEL 34X24X16 or 46X30X16.
   - 400W OPTION HEATER FOR ENCLOSURE PANEL 58X36X18 or 72X36X24.
3. ONLY INSTALL THIS WIRE WHEN [PBR] or PUSH BUTTON RESET IS NOT INSTALLED.

LENGEND
ACR.....AUTO CTRL RELAY
RNCR.....RUNNING CTRL RELAY
FCR.....FAULT CTRL RELAY
FRCR.....FAULT RESET CTRL RELAY
RCR.....RUN CTRL RELAY
GBB.....GROUND BUS BAR
CR.....CONTROL RELAY COIL

[xx]xx
LOCATOR — TERMINAL PT.

AS BUILT

3P 480VAC VFD PANEL
ELECTRICAL CONTROL SCHEMATIC.

DWG. E-1006
REV.E

480VAC STANDARD VFD MOTOR CONTROL PANEL

AS BUILT

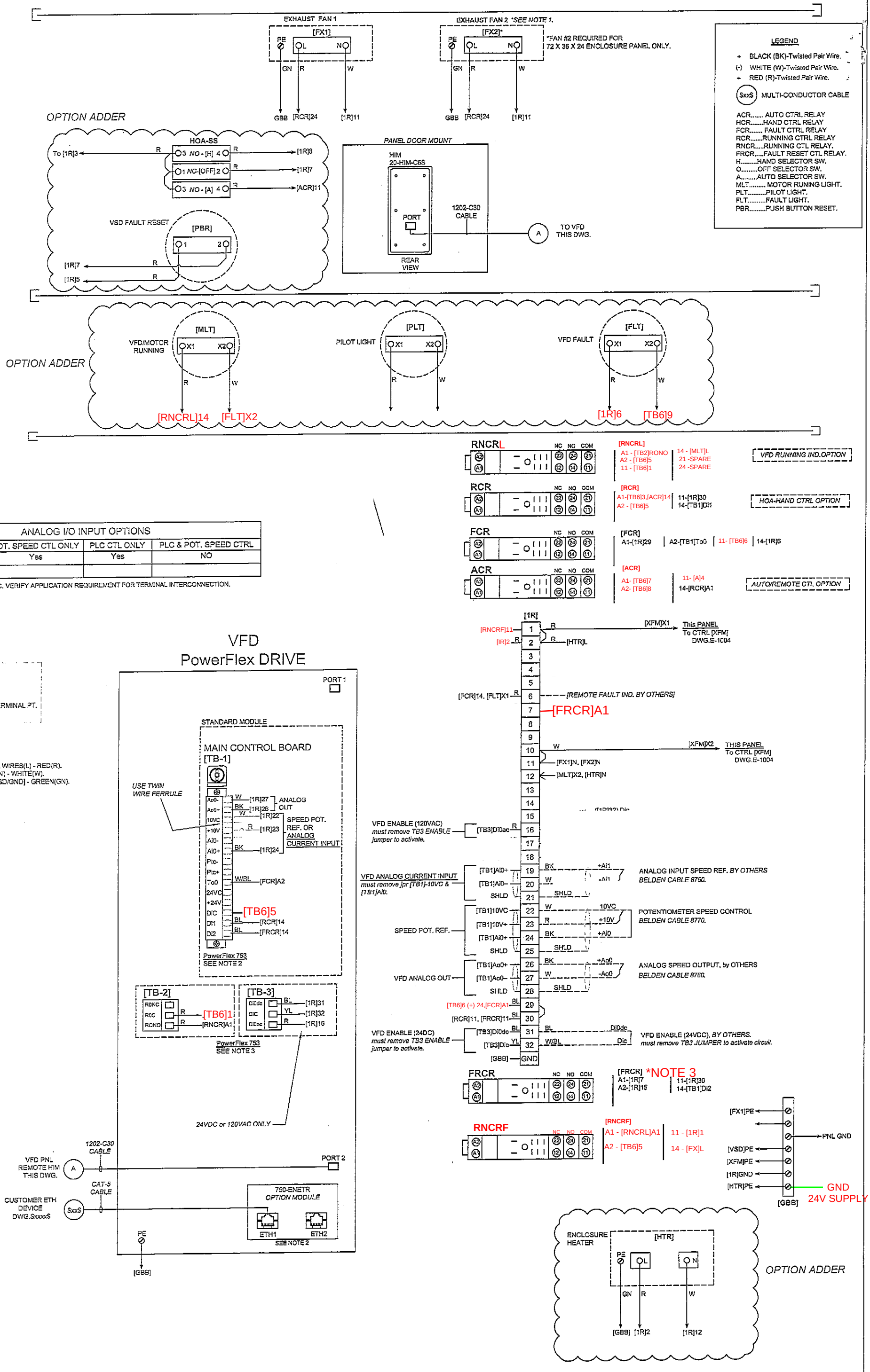

ANALOG I/O INPUT OPTIONS			
STANDARD INPUT	POT. SPEED CTL ONLY	PLC CTL ONLY	PLC & POT. SPEED CTRL
PowerFlex 753	Yes	Yes	NO

DESIGN SPECIFIC. VERIFY APPLICATION REQUIREMENT FOR TERMINAL INTERCONNECTION.

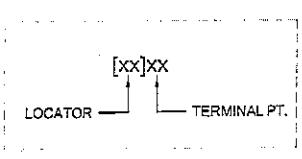

CONTROL WIRES.
1. 120VAC CONTROL WIRES(L) - RED(R).
2. NEUTRAL WIRES(N) - WHITE(W).
3. GROUND WIRES(GD/GND) - GREEN(GN).

CONSTRUCTION NOTES
1. INSTALL DUAL EXHAUST FANS 1 & 2. REQUIRED FOR 72X36X24 ENCLOSURE PANEL.(FRAME 4 ENCLOSURE).
2. VERIFY DRIVE TERMINALS. TB-1,TB-2 AND TB-3 ONLY INSTALLED ON POWERFLEX 753 DRIVES.
3. SPARE RELAY NOT USED AND SHOWN WITH FACTORY WIRING.

3P 480VAC VFD PANEL
VSD ELECTRICAL CONTROL PANEL WIRING DIAGRAM

DWG. E-1009
REV.E

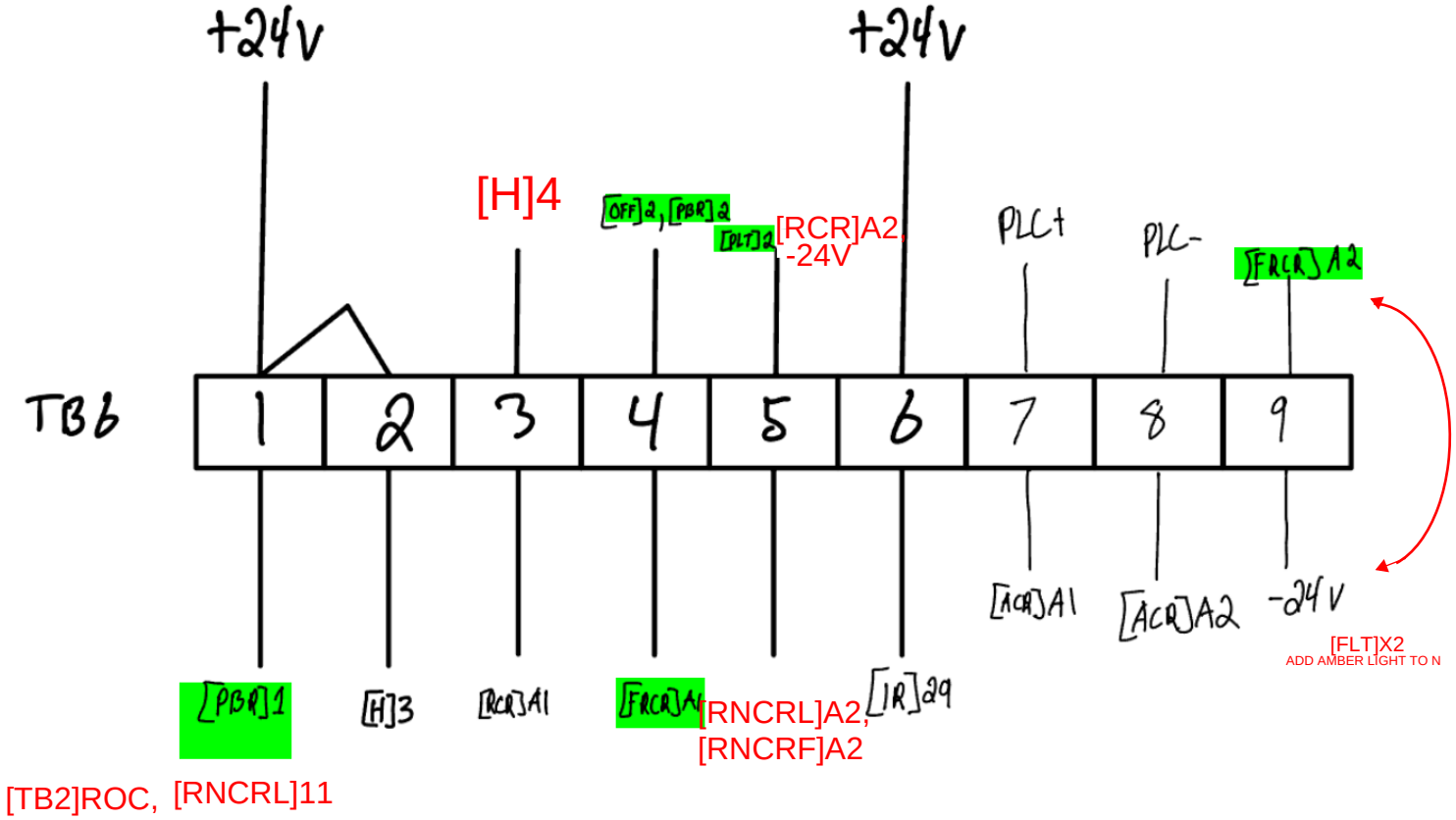
+24V
+24V
[H]4
[OFF]2, [PBR]2
[FLT]2
[RCR]A2,
-24V
PLC+
PLC-
[FRCR]A2
TB6
1
2
3
4
5
6
7
8
9
[ACR]A1
[ACR]A2
-24V
[FLT]X2
ADD AMBER LIGHT TO N
[PBR]1
[H]3
[RCR]A1
[FRCR]A1
[RNCRL]A2,
[RNCRF]A2
[IR]29
[TB2]ROC,
[RNCRL]11